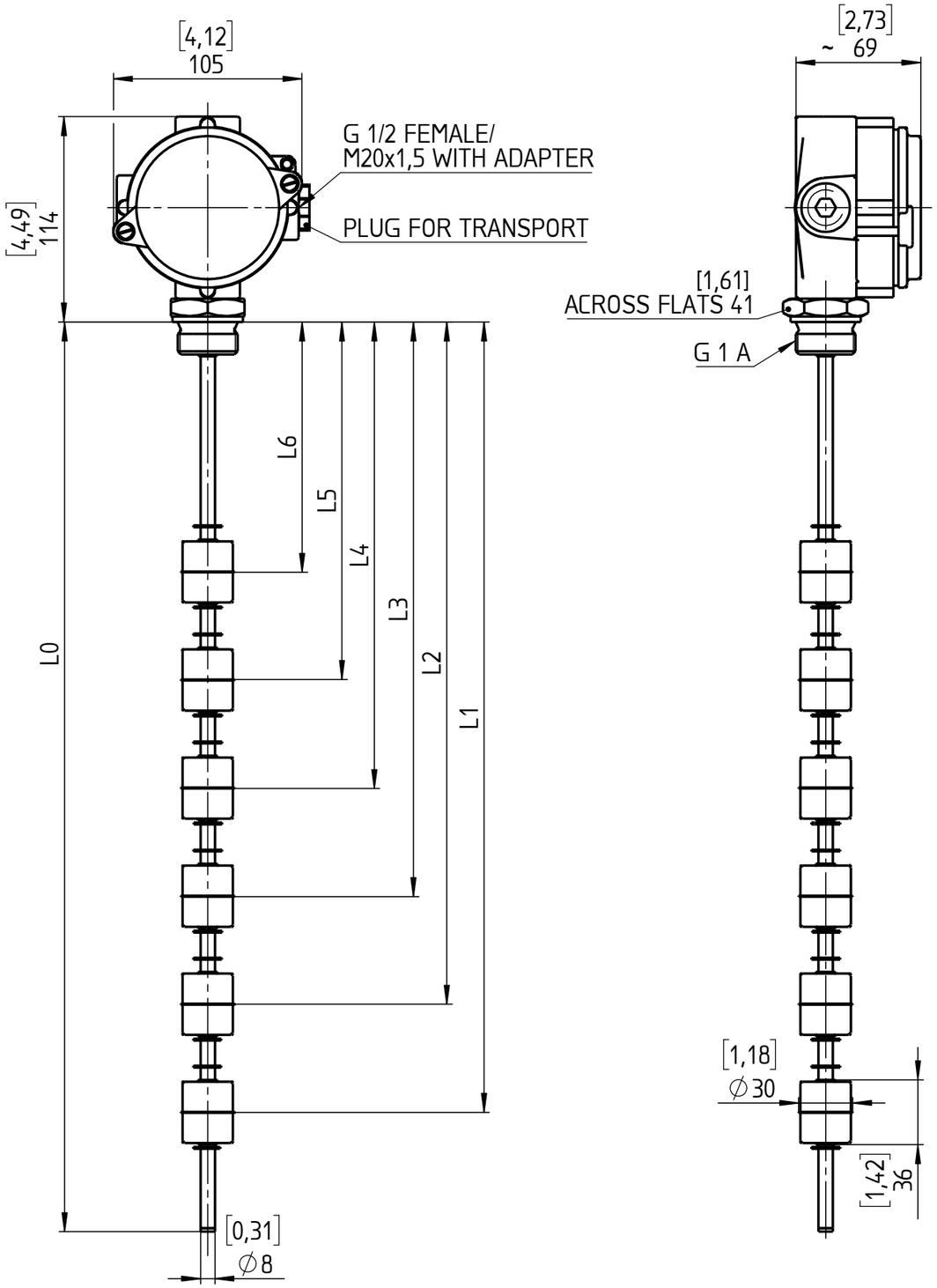

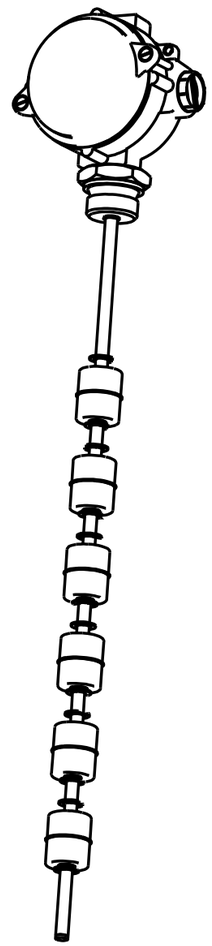

L0-STEM LENGTH AND
SETPOINT POSITION
SPECIFY BY CUSTOMER

600	6	L6
500	5	L5
400	4	L4
300	3	L3
200	2	L2
100	1	L1
CODE	SETPOINTS	LENGTH

	Date	Name
Drawn	01.04.21	J. Krott
Checked	01.04.21	Th. Wel

Rev.	Description	Date	Na.

ASHCROFT®

Dimensions in mm [inch]

General Dimension Level Switch,

1 up to 6 level setpoints
G 1 A, S2 float

DWG. NO.
B 076 I 4-LS-S-X00-25-S2

All specifications are subject to change without notice.