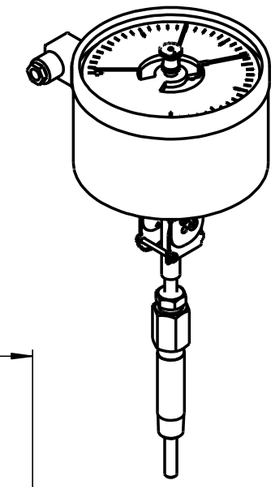

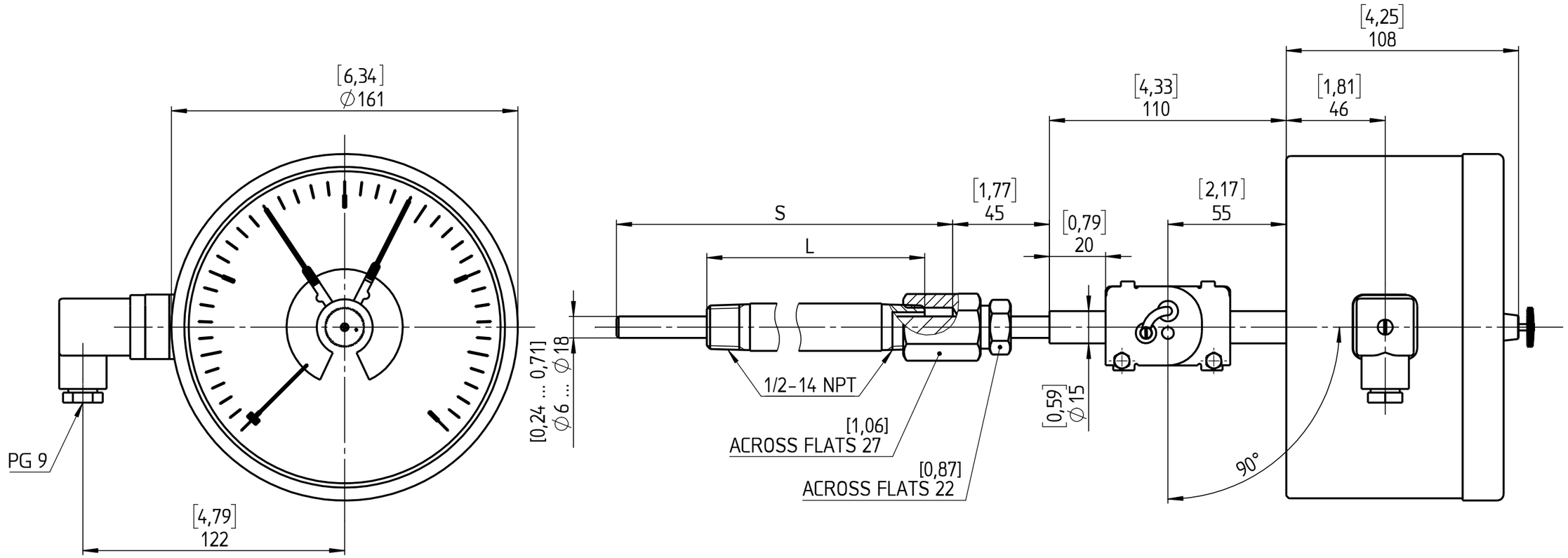

S = STEM LENGTH (SPECIFY BY CUSTOMER)
L = CONNECTION LENGTH (SPECIFY BY CUSTOMER)

This drawing includes confidential information which is the property of ASHCROFT INC. This copy is loaned for a specific purpose, with the understanding that it will not be reproduced or used for any other purpose or disclosed to others, and it will be returned on demand.

Rev.	Description	Date	Na.

	Date	Name
Drawn	12.09.18	C. Kollmer
Checked	12.09.18	Th. Wel

ASHCROFT

Dimensions in mm [inch]

General Dimension
S5500, NG160,
knee joint 360°, CS3, 074, Contact

DWG. NO. B 076 I 2-S5500-NG160-E2 -CS3-074-CONTACT

All specifications are subject to change without notice.