EXECUTION	∅ STEM
AE	[0,31] 8
AI	[0,25] 6,4
AM	[0,24] 6
A3B	[0,38] 9,5

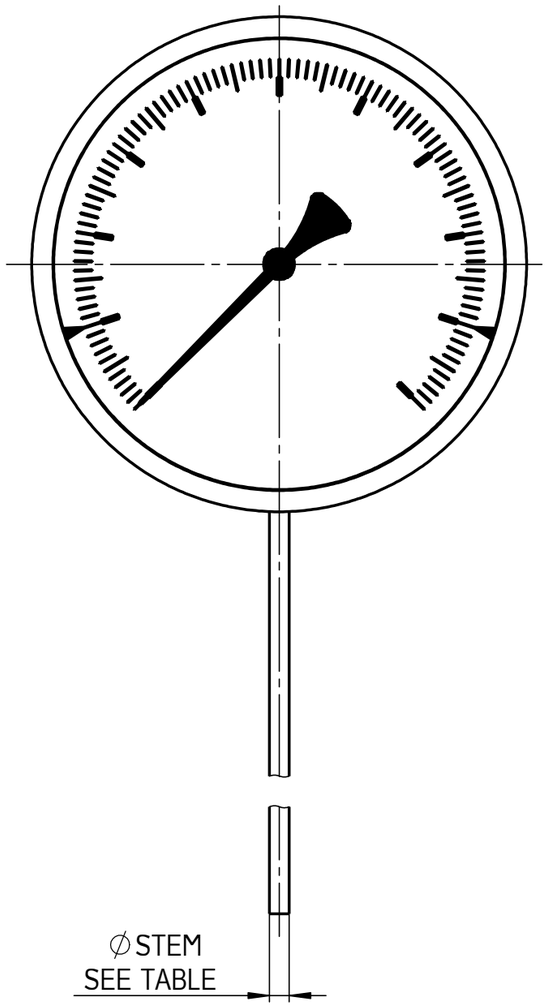

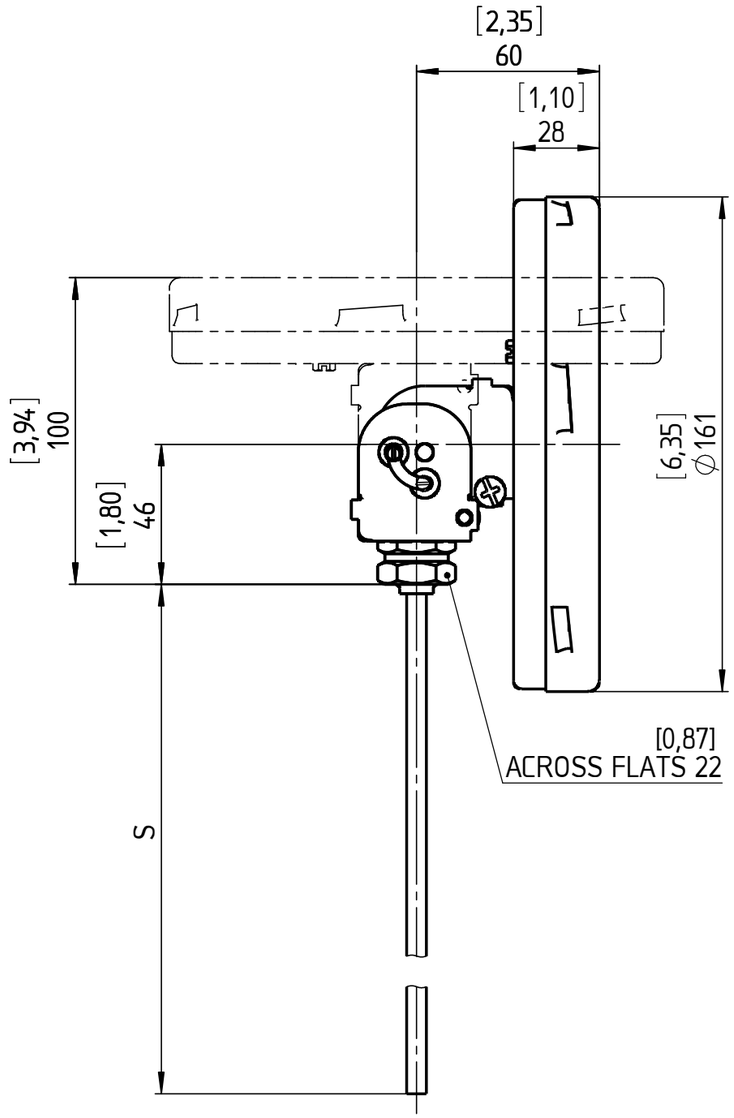

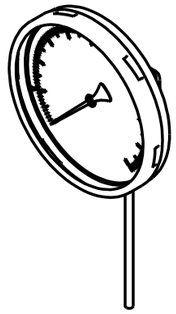

S = STEM LENGTH (SPECIFY BY CUSTOMER)

Rev.	Description	Date	Na.

	Date	Name
Drawn	18.02.19	J. Krott
Checked	18.02.19	Th. Wel

ASHCROFT®

Dimensions in mm [inch]

General Dimension Bimetal, NG160, A, Every Angle, 040

DWG. NO.
B 076 I 2-NG160A-E-040

All specifications are subject to change without notice.