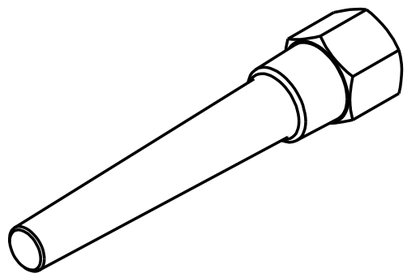

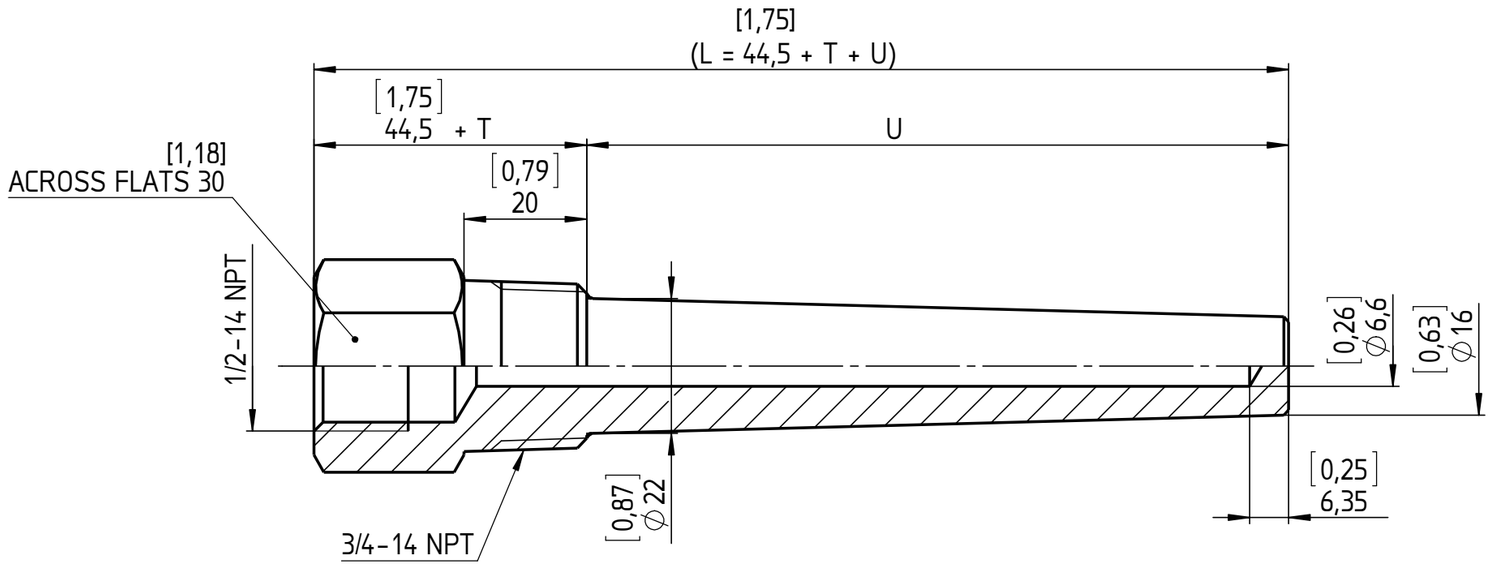

U-LENGTH (SPECIFY BY CUSTOMER)
T-LENGTH (SPECIFY BY CUSTOMER)
FOR L-LENGTH ≥ 1300 MM THE THERMOWELL WILL BE MANUFACTURED IN PIECES!

This drawing includes confidential information which is the property of ASHCROFT INC. This copy is loaned for a specific purpose, with the understanding that it will not be reproduced or used for any other purpose or disclosed to others, and it will be returned on demand.

Rev.	Description	Date	Na.

	Date	Name
Drawn	08.05.14	J. Krott
Checked	08.05.14	Th. Wel

ASHCROFT®

Dimensions in mm [inch]

General Dimension
Thermowell, HT, 260, 1/2-14 NPT
3/4-14 NPT

DWG. NO.
B 076 I 2-HT-75-2-260

All specifications are subject to change without notice.