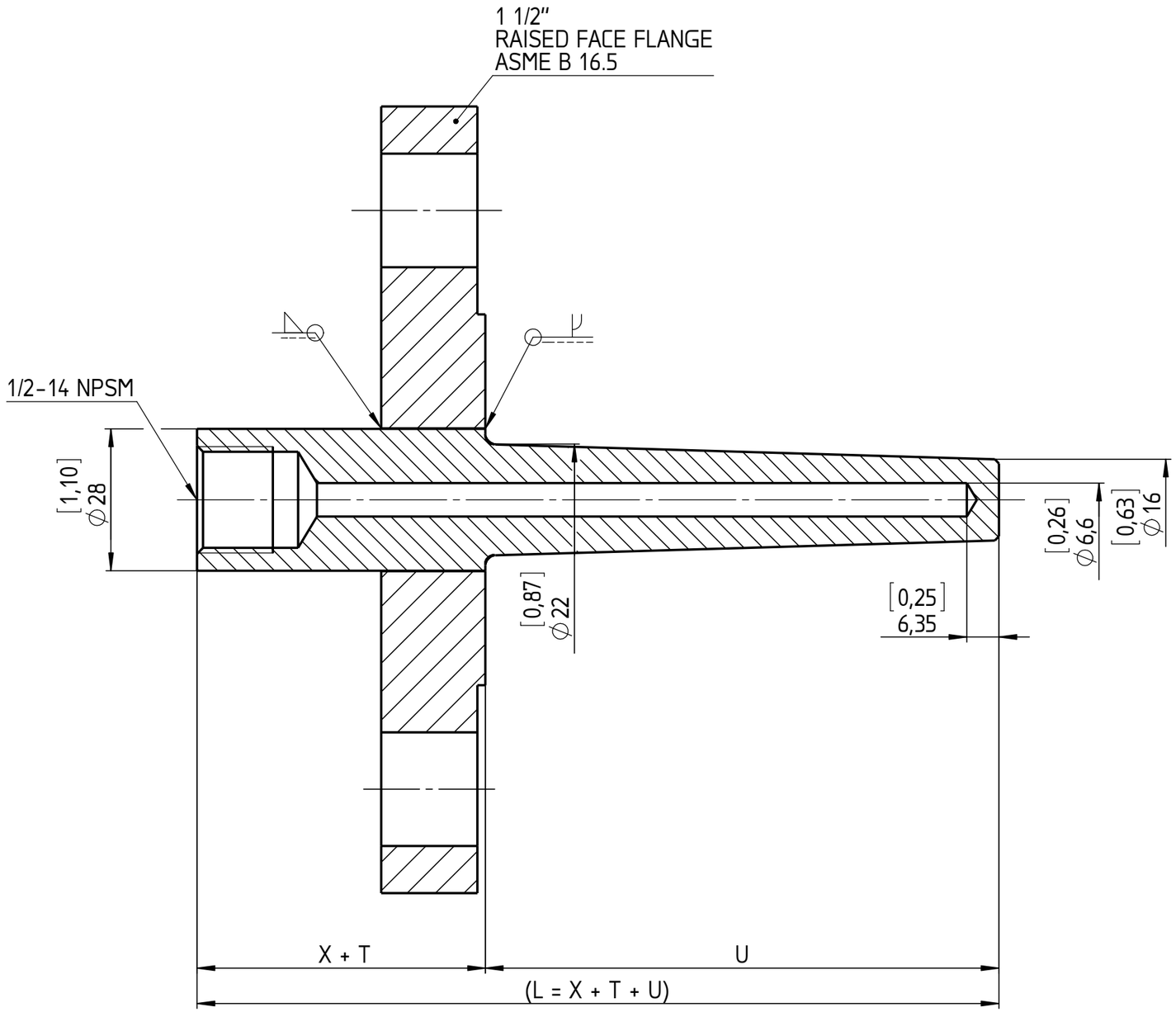

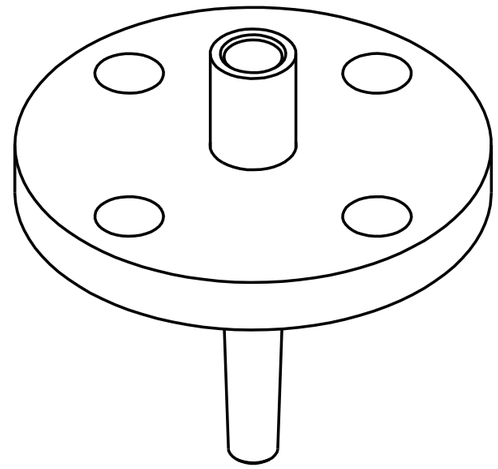

lb/sq. in.	X
150	[2,24] 57
300	
600	
900/1500	
2500	[2,76] 70

U-LENGTH (SPECIFY BY CUSTOMER)
T-LENGTH (SPECIFY BY CUSTOMER)

Rev.	Description	Date	Na.
A	Addad dimensions in Inch	14.05.12	Krott

	Date	Name
Drawn	28.03.12	J. Krott
Checked	15.05.12	Th. Wel

ASHCROFT®

Dimensions in mm [inch]

General Dimension
Thermowell, HF, 260, 1 1/2" Raised Face Flange

DWG. NO.
B 076 I 2-HF-15-260-RF