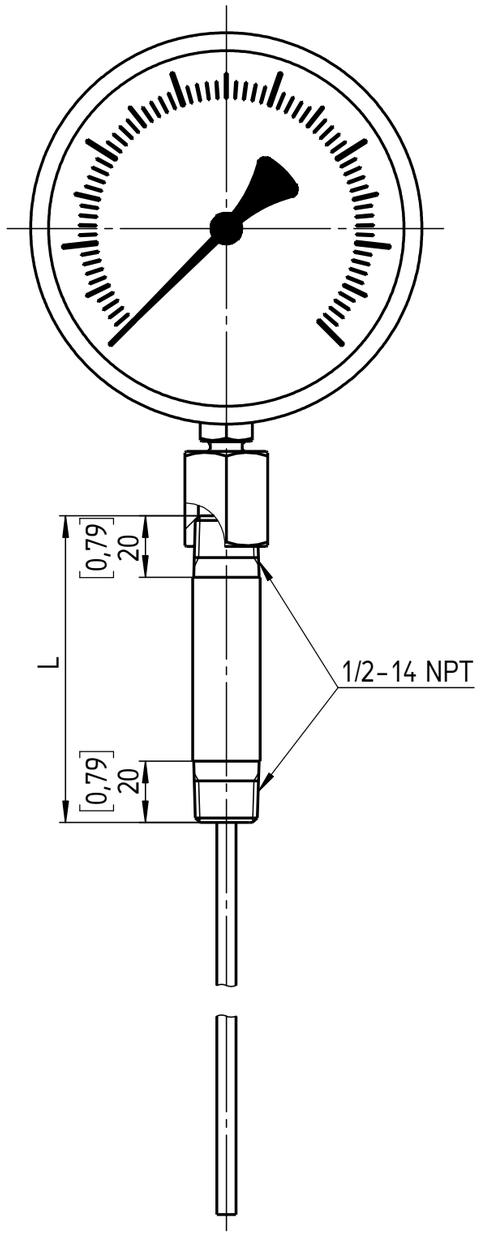

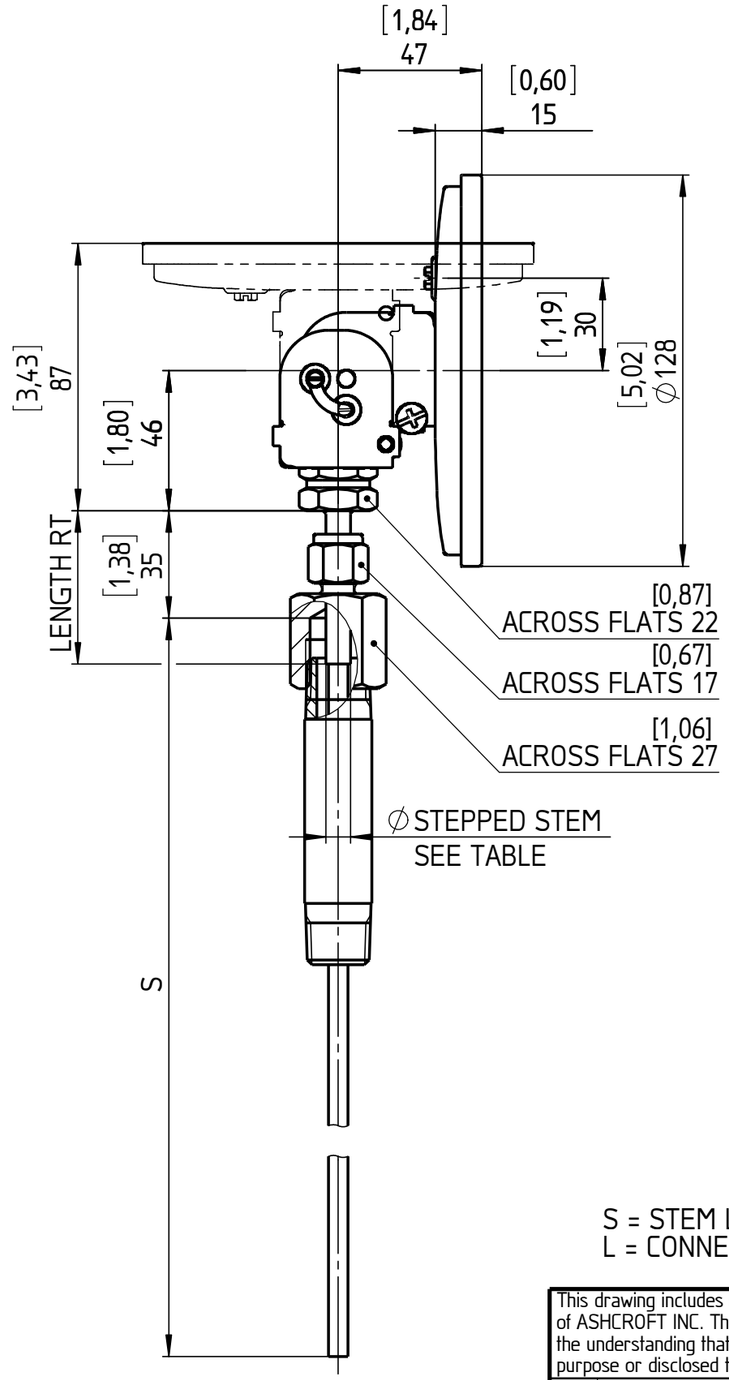

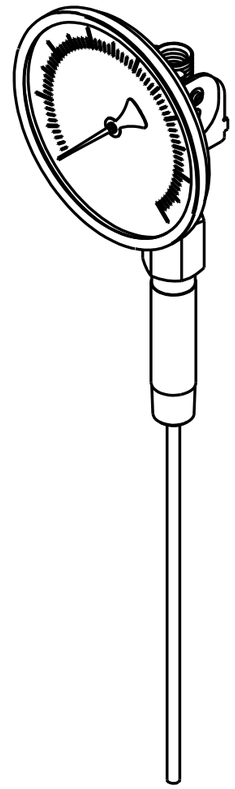

LENGTH RT
[1,97] 50
[2,76] 70
[3,94] 100

EXECUTION	∅STEPPED STEM FROM / TO
RT8/6	[0,31] / [024] 8 / 6
RT10/6	[0,39] / [024] 10 / 6
RT10/8	[0,39] / [031] 10 / 8

S = STEM LENGTH (SPECIFY BY CUSTOMER)
L = CONNECTION LENGTH (SPECIFY BY CUSTOMER)

Rev.	Description	Date	Na.

	Date	Name
Drawn	18.08.16	J. Krott
Checked	18.08.16	

ASHCROFT®

Dimensions in mm [inch]

General Dimension
Bimetal, 5", E, Every Angle, 074, EN, RT

DWG. NO.
B 076 I 2-5E-E-074-EN-RT

All specifications are subject to change without notice.