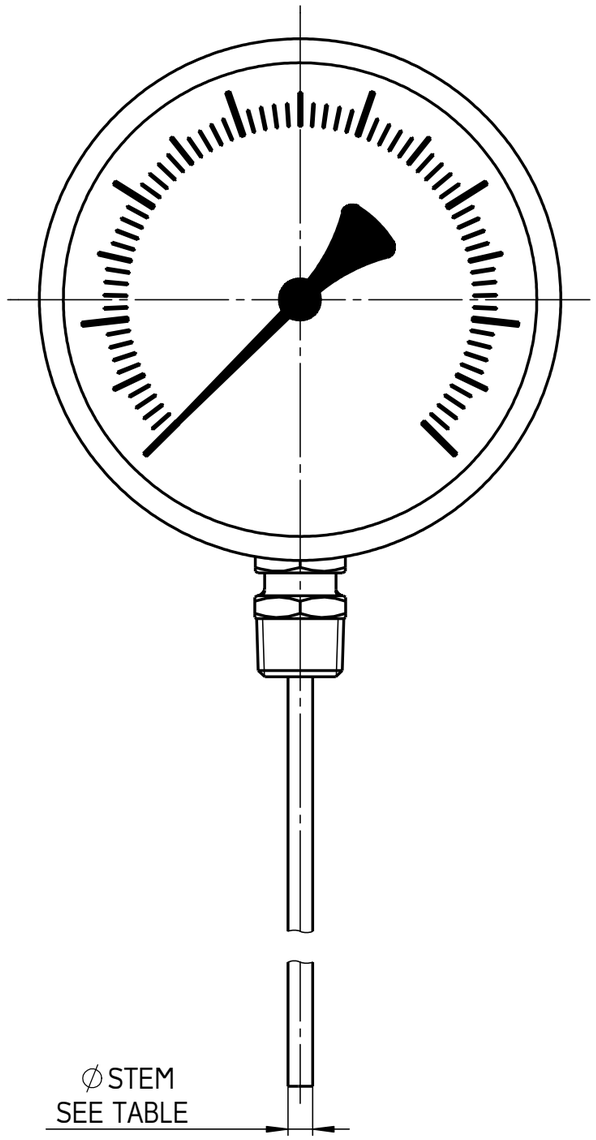

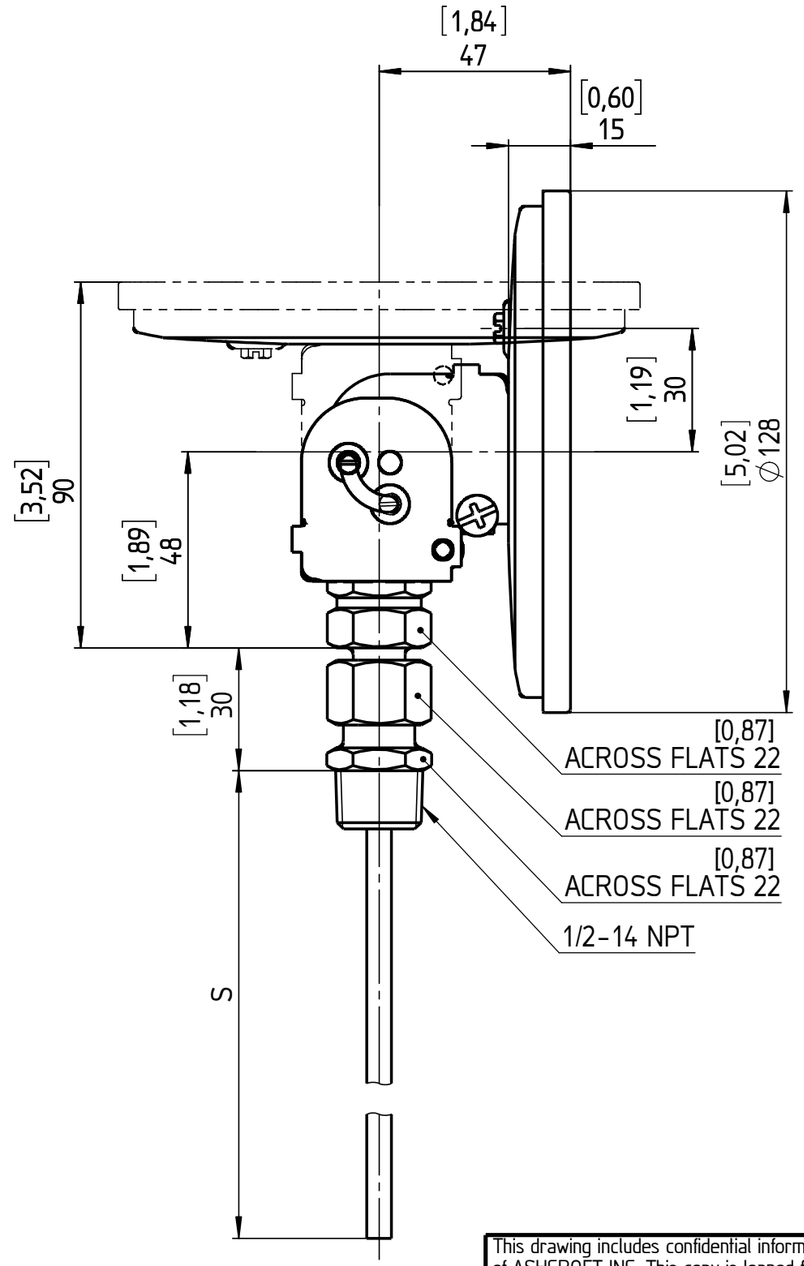

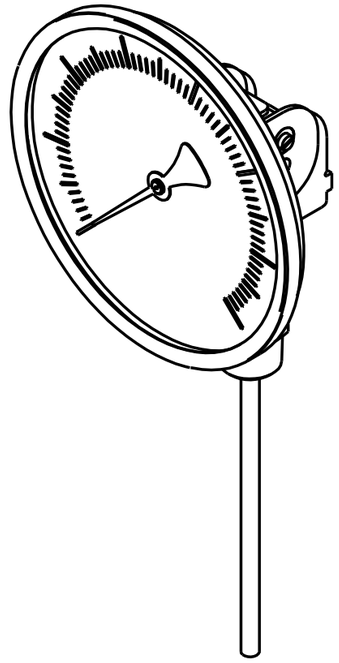

EXECUTION	∅STEM
EE	[0,31] 8
EI	[0,25] 6,4
EM	[0,24] 6
E3B	[0,38] 9,5

S = STEM LENGTH (SPECIFY BY CUSTOMER)

All specifications are subject to change without notice.

Rev.	Description	Date	Na.

	Date	Name
Drawn	25.08.17	J. Krott
Checked	25.08.17	Th. Wel

ASHCROFT®

Dimensions in mm [inch]

General Dimension
Bimetal, 5", E, Every Angle, 042

DWG. NO.
B 076 I 2-5E-E-042