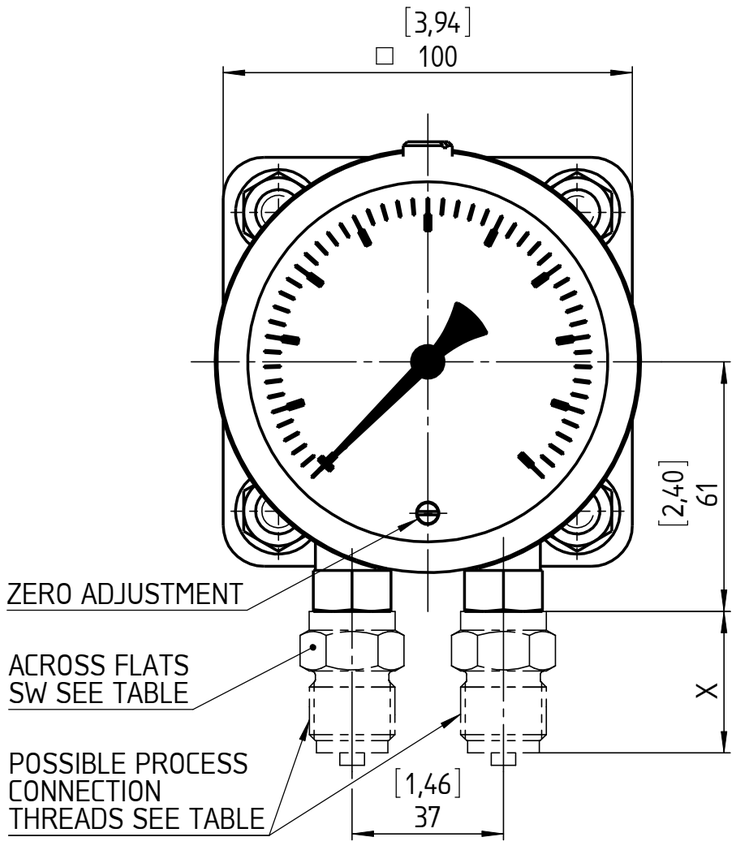

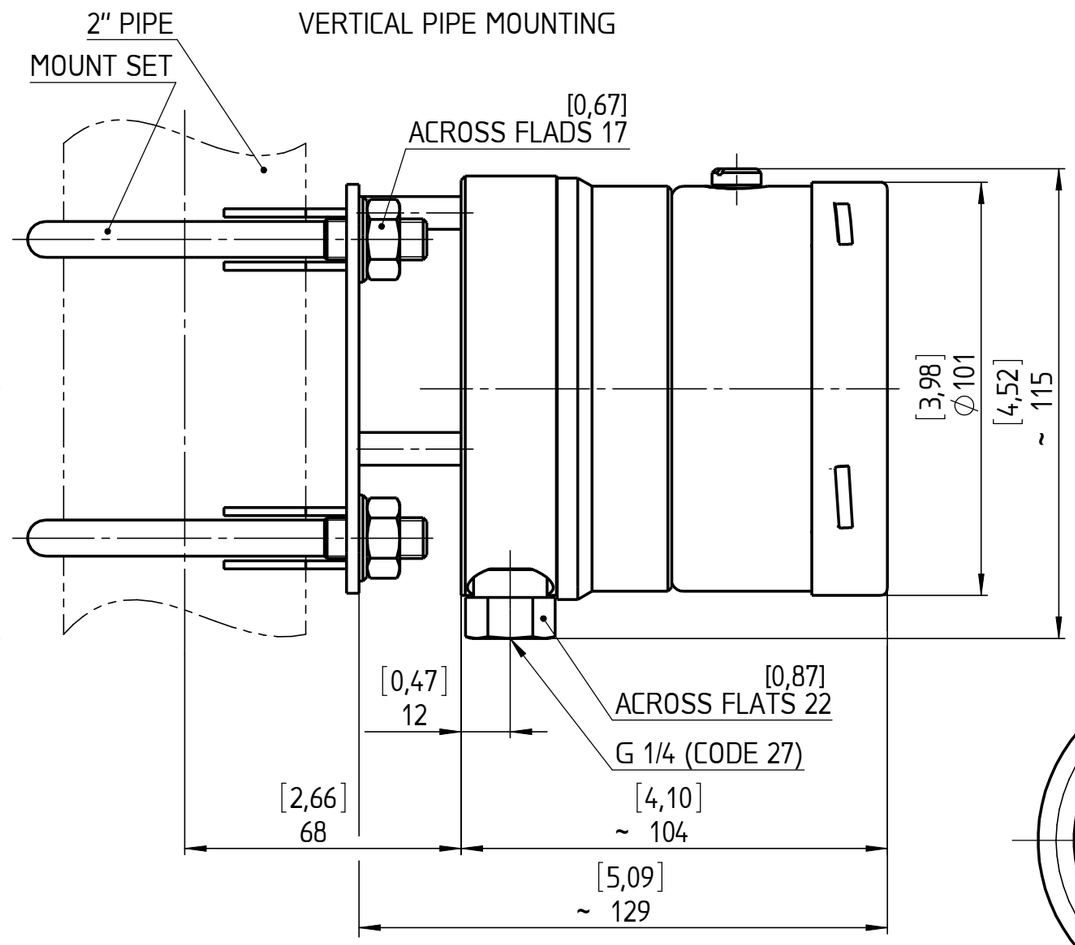

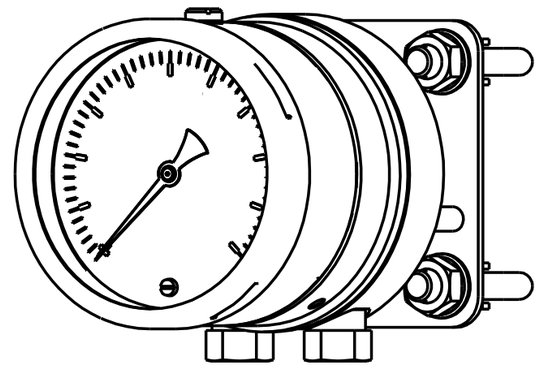

HORIZONTAL PIPE MOUNTING

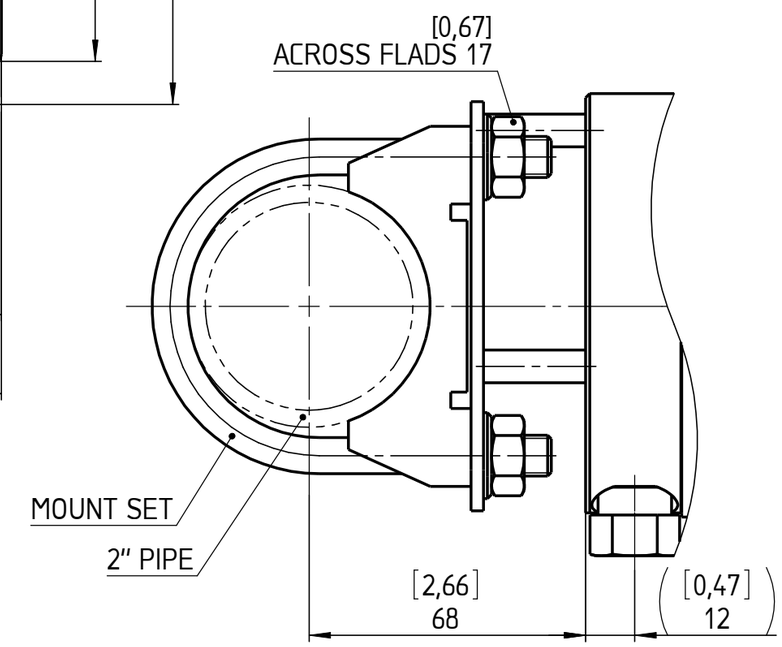

THREADS	CODE	X	SW
1/4-18 NPT MALE; DIN EN 837	02	30 [1,18]	19 [0,75]
1/2-14 NPT MALE; DIN EN 837	04	37 [1,46]	22 [0,87]
G 1/4 B MALE; DIN EN 837	13	25 [0,98]	19 [0,75]
G 1/2 B MALE; DIN EN 837	15	37 [1,46]	22 [0,87]
1/4-18 NPT FEMALE	25	20 [0,79]	19 [0,79]
1/2-14 NPT FEMALE	50	26 [1,02]	27 [1,06]

All specifications are subject to change without notice.

Rev.	Description	Date	Na.

	Date	Name
Drawn	16.02.11	J. Krott
Checked	16.02.11	Th. Wal

ASHCROFT

Dimensions in mm [inch]

General Dimension
F5502, NG100, Lower, TM

DWG. NO.
B 076 I 1-F5502-NG100-L-TM