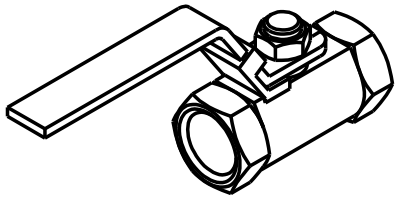

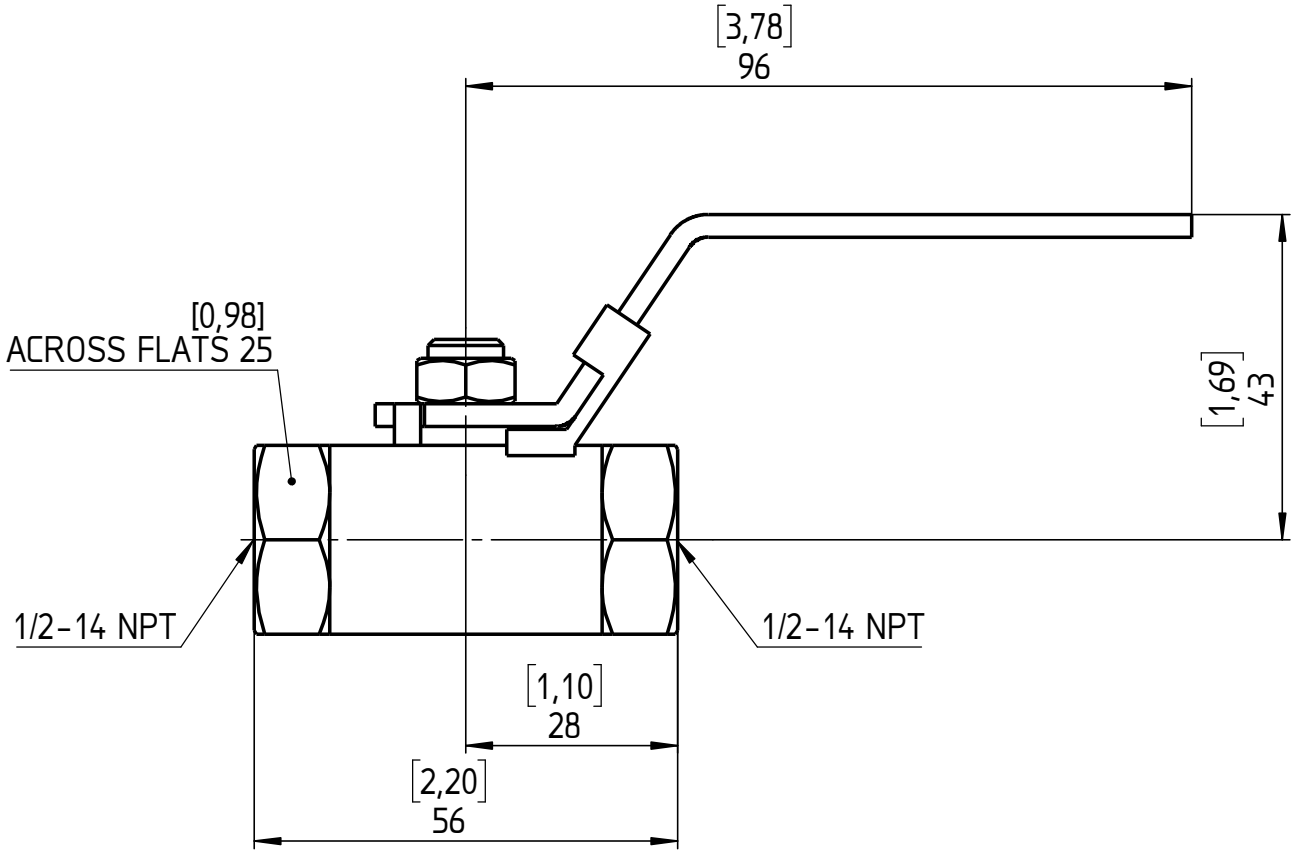

All specifications are subject to change without notice.

This drawing includes confidential information which is the property of ASHCROFT INC. This copy is loaned for a specific purpose, with the understanding that it will not be reproduced or used for any other purpose or disclosed to others, and it will be returned on demand.

Rev.	Description	Date	Na.

	Date	Name
Drawn	29.09.16	J. Krott
Checked	29.09.16	Th. Wel

ASHCROFT®

Dimensions in mm [inch]

General Dimension
Ball Valve, V02, BV, Style B
1/2-14 NPTf - 1/2-14 NPTf

DWG. NO.
A 076 I 8-50-V02-BVB-50