Third angle projection

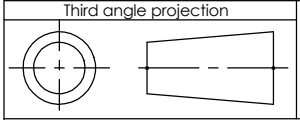

This drawing includes confidential information which is the property of ASHCROFT INC.
This copy is loaned for a specific purpose, with the understanding that it will not be reproduced or used for any other purpose or disclosed to others, and it will be returned on demand.

ASHCROFT INC.
250 EAST MAIN STREET
STRATFORD, CT 06614

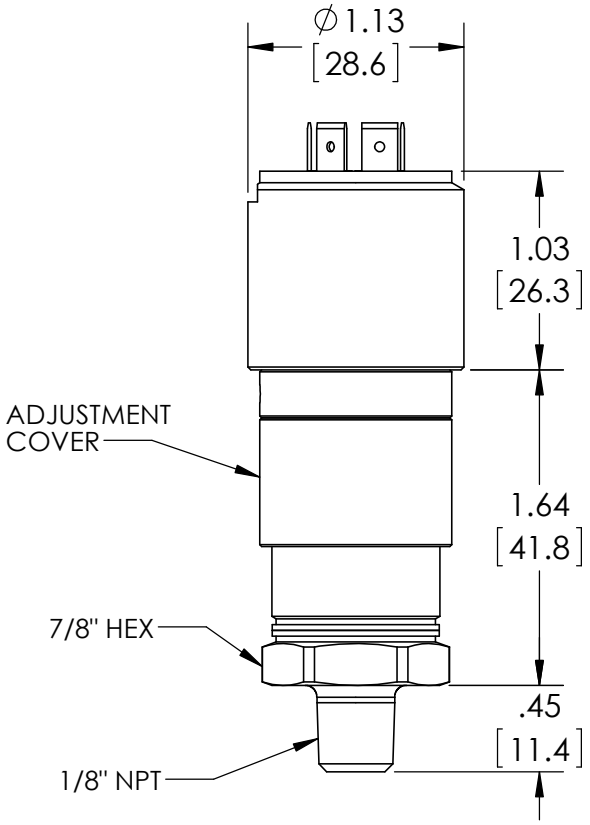

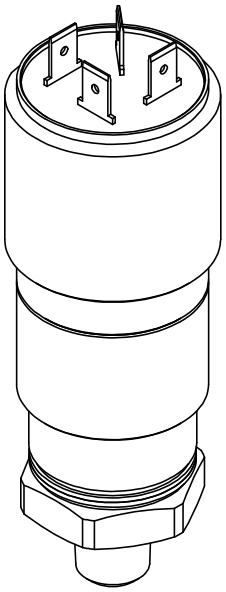

DIMENSIONS IN [ ] ARE MILLIMETERS

REV.	ECO	DESCRIPTION	BY	DATE
A	0005029	RELEASED GENERAL DIMS.	MJS	7/14/2011

This print certified correct for		General Dimensions			
Customer's Name		A-SERIES SWITCH APAN41H000T_01			
Customer's Order No.		Drawn MJS	Date 7/14/11	Date of Issue	
Ashcroft Order No.		Checked	Date	SHEET-1	Rev.
Certified by	Date	Approved	Date	70A3617	A