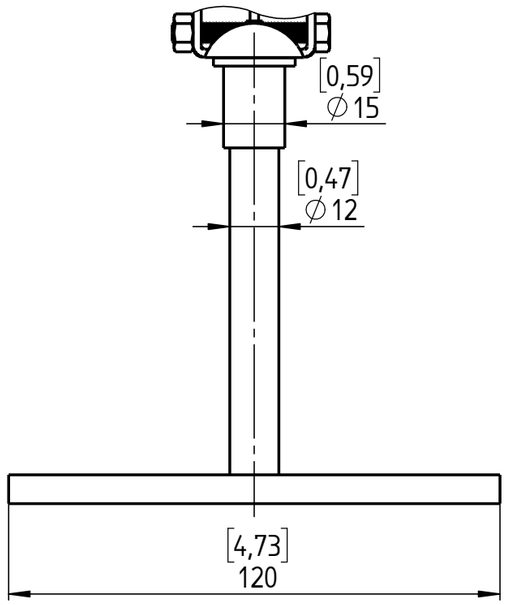

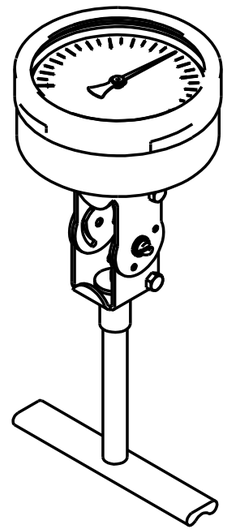

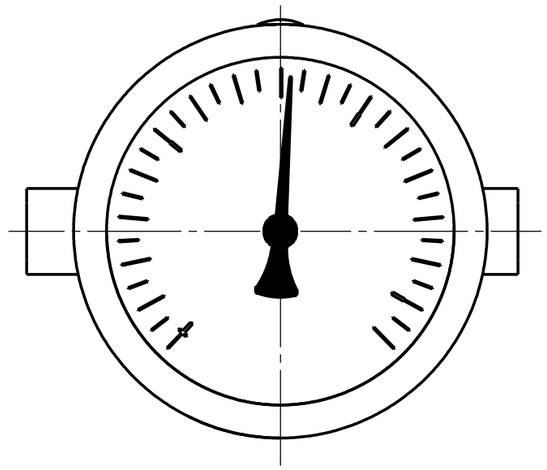

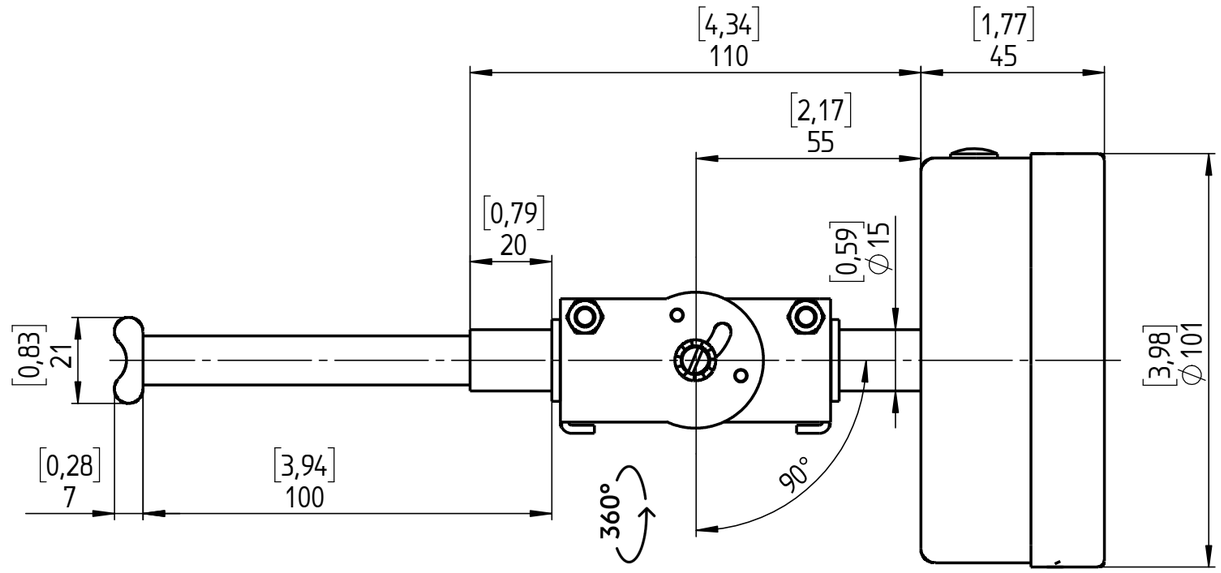

Rev.	Description	Date	Na.

	Date	Name
Drawn	31.01.18	J. Krott
Checked	31.01.18	Th.Wel

ASHCROFT

Dimensions in mm [inch]

General Dimension S5500, NG100, knee joint 360°, S

DWG. NO.
B 076 I 2-S5500-NG100-E2-S