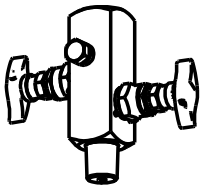

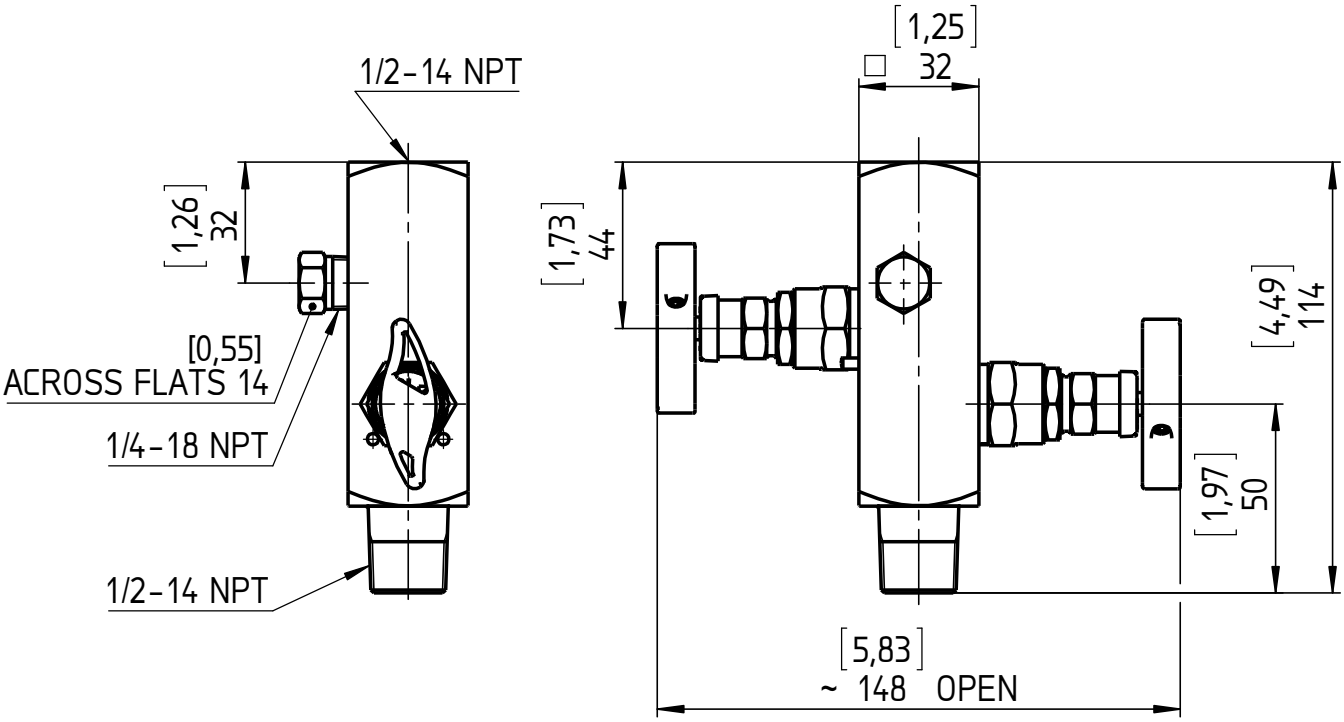

All specifications are subject to change without notice.

This drawing includes confidential information which is the property of ASHCROFT INC. This copy is loaned for a specific purpose, with the understanding that it will not be reproduced or used for any other purpose or disclosed to others, and it will be returned on demand.

B	Change code	03.03.16	Krott
A	Change design	09.02.15	Krott
Rev.	Description	Date	Na.

	Date	Name
Drawn	09.02.15	J. Krott
Checked	03.03.16	Th. Wel

ASHCROFT®

Dimensions in mm [inch]

General Dimension
Valve, V02, Block & Bleed
1/2-14 NPTm - 1/2-14 NPTf

DWG. NO.
A 076 I 8-Valve-04-V02-2VA-50