EXECUTION	∅ STEPPED STEM FROM / TO
RT8/6	[0,31] / [024] 8 / 6
RT10/6	[0,39] / [024] 10 / 6
RT10/8	[0,39] / [031] 10 / 8

LENGTH RT
[1,97] 50
[2,76] 70
[3,94] 100

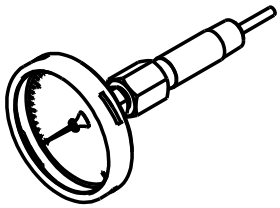

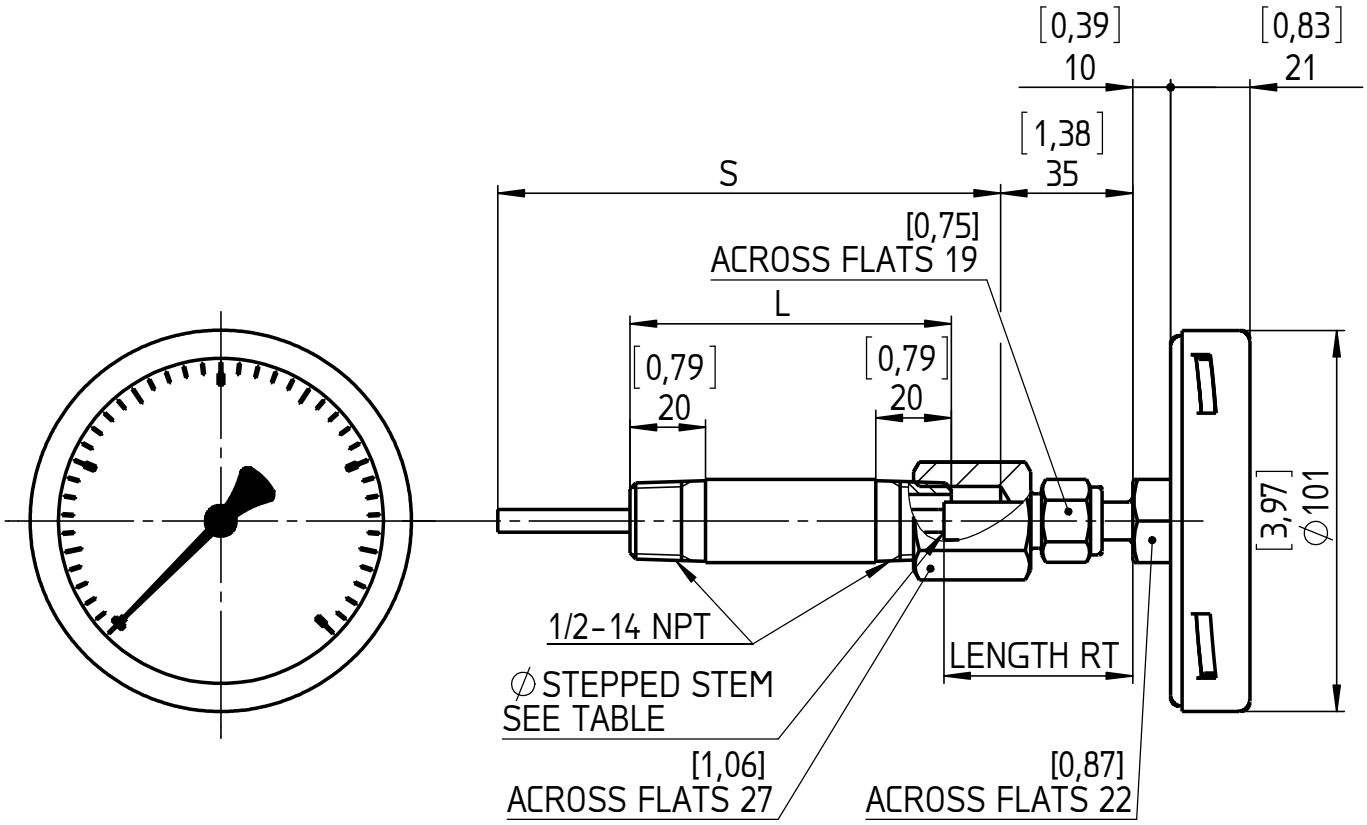

S = STEM LENGTH (SPECIFY BY CUSTOMER)
L = CONNECTION LENGTH (SPECIFY BY CUSTOMER)

All specifications are subject to change without notice.

	Date	Name
Drawn	24.02.16	J. Krott
Checked	04.03.16	Th. Wel

Rev.	Description	Date	Na.

ASHCROFT®

Dimensions in mm [inch]

General Dimension

Bimetal, NG100, A, Back, 074, EN, RT

DWG. NO.
A 076 I 2-NG100A-R-074-EN-RT